MODEL RATINGS

AST6200-S11-200

Three-phase online soft starter for squirrel-cage induction motors.

200 kW / 150 A

1000–1140 V AC · 30–70 Hz

Anti-parallel thyristors control all three phases. The motor remains in the thyristor power circuit during normal running.



491 mm enclosure width

Electrical ratings and configuration

Characteristic	Model specification
Rated motor power / starter current	200 kW / 150 A
Rated supply	Three-phase, 1000–1140 V AC (S11); 30–70 Hz
Power circuit	Online thyristor control, factory setting A10 = 0
Motor connection	In-line or inside-delta, selectable with A18
Start / stop	Voltage ramp, current limit or torque start; timed soft stop or coast stop
Control and communications	Removable LCD keypad, external terminals and RS485 / Modbus RTU

Select the starter against motor nameplate current, supply voltage and starting duty. The permissible number of starts per hour depends on the load and thermal duty.

MOTOR CONTROL

Starting and stopping

Select a starting profile with A01. Adjust the ramp and current limit to suit the load.

Start and stop settings

Code	Setting	Range or selection	Factory setting
A01	Starting mode	Voltage ramp / current limit / torque	Voltage ramp
A02	Starting current limit	50–600%	300%
A03	Initial voltage	30–80%	35%
A04	Starting time	1–120 s	15 s
A05	Hold voltage	60–85%	65%
A06	Initial ramp time	1–10 s	5 s
A07	Hold time	1–120 s	10 s
A08	Final ramp time	1–10 s	3 s
A09	Soft stop time	0–60 s	0 s (coast stop)

Operation and monitoring

Function	Operation
Command source · A00	Use the keypad, external terminals, RS485 or a combination. The factory setting enables keypad and external control.
External control · A22	Select pulse or maintained-level control. Factory setting: pulse. See the connection diagrams on page 04.
Operation panel · A23	Removable Chinese / English LCD. RUN starts the motor; STOP/RESET stops or resets it. SHIFT opens the fault record from the main display.
Live measurements	Read phase and average currents, input and output voltages, start completion, current unbalance, line frequency and phase sequence.
Operating history	Read cumulative run time and number of starts. Fault records include supply voltage, phase currents and cumulative run time.

MOTOR AND STARTER PROTECTION

Protection and trip functions

The code in the first column is the trip message number shown on the keypad.

Detection settings and factory responses

Trip	Function	Detection or adjustment	Factory setting
01	Input phase loss	One or more input phases are missing when a start is requested.	C09: trip
02	Output phase loss	Output phase loss or open motor connection.	C10: trip
03	Running overload	Inverse-time protection. B00 selects class 1–30.	Class 10; C00: trip
04	Underload	B11 threshold 10–100%; B12 delay 1–120 s.	30% / 10 s; C06: ignore
05	Starter overheat	The starter temperature switch detects overheating.	C07: trip
06	Overvoltage	B05 threshold 100–140%; B06 delay 0–120 s.	120% / 5 s; C03: trip
07	Undervoltage	B07 threshold 50–100%; B08 delay 0–120 s.	80% / 5 s; C04: trip
08	Running overcurrent	B03 threshold 50–600%; B04 delay 0–6000 s.	200% / 5 s; C02: trip
09	Starting overcurrent	B01 threshold 50–600%; B02 delay 0–120 s.	500% / 5 s; C01: ignore
10	External fault	External fault contact opens between terminals 7 and 10.	Contact closed in normal operation
11	Phase sequence	B13 accepts any, positive or reverse sequence.	Any sequence
12	Three-phase current unbalance	B09 threshold 20–100%; B10 delay 0–120 s.	40% / 3 s; C05: trip
13	SCR short circuit	Thyristor breakdown diagnostic. C08 controls the emergency response.	C08 = 0 (Close)

Class 10 overload operating times

Motor current	1.5 × rated	2 × rated	4 × rated	6 × rated
Operating time	280 s	117 s	23.3 s	10 s

Starting overcurrent and underload default to Ignore. Review the protection settings during commissioning. Clear the cause of a trip before resetting the starter.

POWER AND CONTROL CONNECTIONS

Wiring diagrams

Power terminals R/S/T connect to the three-phase supply. Terminals U/V/W connect to the motor.

Main circuit and control terminals

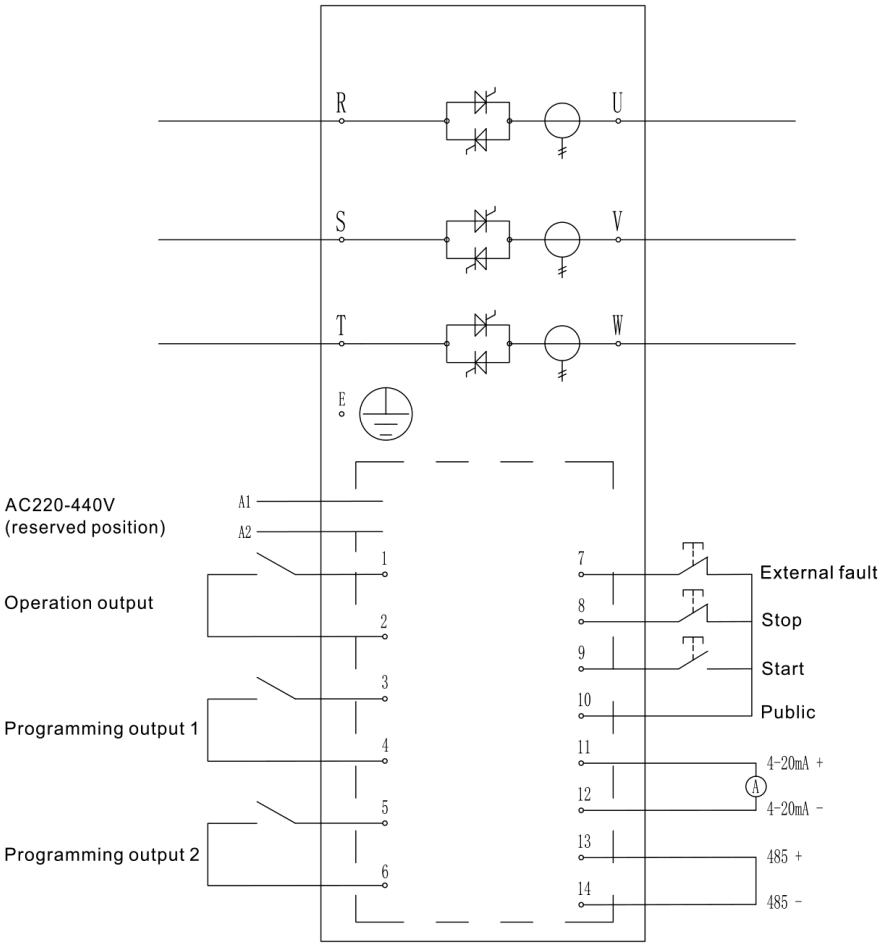

Remote start and stop

Two-wire control

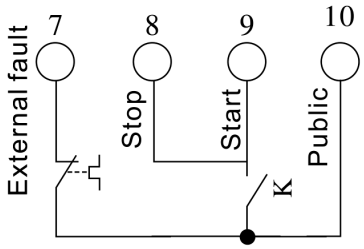

Close K to start; open K to stop.

Three-wire control

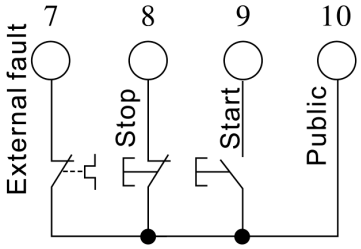

Separate stop and start pushbuttons.

Terminal 10 is the control common. The external fault circuit between terminals 7 and 10 must be closed for normal operation.

CONTROL INTERFACES

Terminal functions and Modbus RTU

Remote inputs, relay outputs, analog feedback and the RS485 interface.

Control terminal assignments

Terminals	Signal	Function or factory setting
1 / 2	Running relay	Voltage-free contact closes after a successful start.
3 / 4	Programmable relay 1	A11: operation by default. A12 output delay 0–600 s; default 0 s.
5 / 6	Programmable relay 2	A13: fault by default. A14 output delay 0–600 s; default 0 s.
7 / 10	External fault / common	Closed during normal operation.
8 / 9 / 10	Stop / start / common	Remote command inputs; use the two-wire or three-wire circuit on page 04.
11 / 12	Analog output + / −	4–20 mA signal. A17 sets the upper-limit current from 50–500%; default 200%.
13 / 14	RS485 + / −	Half-duplex Modbus RTU.
A1 / A2	Optional external supply	220–440 V AC. Specify this supply option when ordering.

Communication settings and operating data

Item	Specification
Address and speed	A19: station 1–127 (default 1). A20: 2400, 4800, 9600 or 19200 bit/s (default 9600).
Serial format	8 data bits, no parity, 1 stop bit (8N1).
Supported functions	03 reads a register; 06 writes a single register.
Status registers	100: ready, starting, running, stopping or fault. 101: current fault.
Measurement registers	102: average current; 103–104: input and output voltage; 105–107: phase currents; 111–112: frequency and phase sequence.

Programmable relay functions include operation, standby, fault and current reached. A15 sets the current-reached threshold from 1–600% (default 100%).

MECHANICAL DATA

Dimensions and installation

Enclosure dimensions, single-unit packing data and operating conditions.

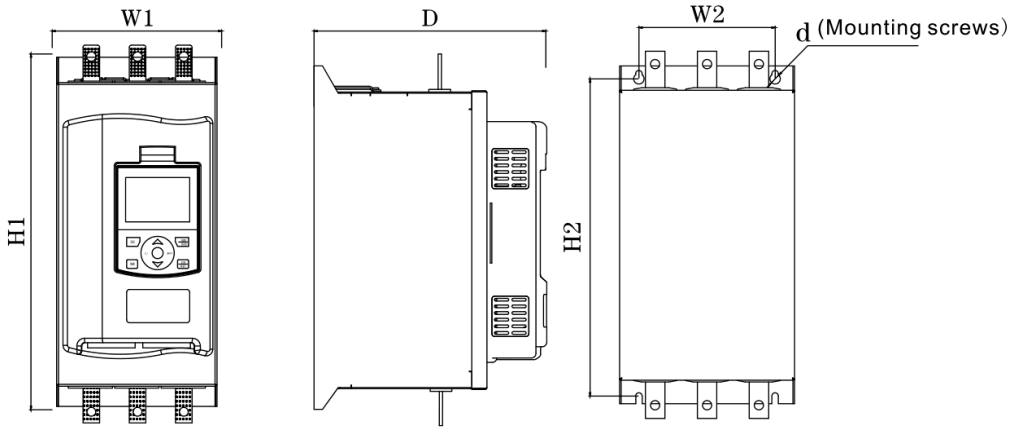

Series outline for orientation. Obtain the model-specific mounting drawing before drilling.

Enclosure and single-unit packing data

Item	Measurement basis	Model value
Product dimensions	Height × width × depth	560 × 491 × 303 mm
Packed dimensions	Height × width × depth	700 × 590 × 420 mm
Net weight	Unpacked unit	29.7 kg
Gross weight	One packed unit	36.8 kg

Operating environment

Item	Installation requirement
Enclosure / cooling	IP20; forced-air cooling. Keep the ventilation path clear.
Ambient temperature	−10 °C to +40 °C.
Altitude	Below 2000 m; derating is required above 2000 m.
Humidity / vibration	Below 95% RH, non-condensing; vibration below 0.5 g.
Location	Indoors, well ventilated and free of conductive dust or flammable, explosive or corrosive gases.