MODEL RATINGS

# AST6200-S11-022

Three-phase online soft starter for squirrel-cage induction motors.

## 22 kW / 15 A

### 1000–1140 V AC · 30–70 Hz

Anti-parallel thyristors control all three phases. The motor remains in the thyristor power circuit during normal running.




145 mm enclosure width

## Electrical ratings and configuration

| Characteristic | Model specification |
|---|---|
| **Rated motor power / starter current** | 22 kW / 15 A |
| **Rated supply** | Three-phase, 1000–1140 V AC (S11); 30–70 Hz |
| **Power circuit** | Online thyristor control, factory setting A10 = 0 |
| **Motor connection** | In-line or inside-delta, selectable with A18 |
| **Start / stop** | Voltage ramp, current limit or torque start; timed soft stop or coast stop |
| **Control and communications** | Removable LCD keypad, external terminals and RS485 / Modbus RTU |

Select the starter against motor nameplate current, supply voltage and starting duty. The permissible number of starts per hour depends on the load and thermal duty.

MOTOR CONTROL

# Starting and stopping

Select a starting profile with A01. Adjust the ramp and current limit to suit the load.

## Start and stop settings

| Code | Setting | Range or selection | Factory setting |
|---|---|---|---|
| **A01** | Starting mode | Voltage ramp / current limit / torque | Voltage ramp |
| **A02** | Starting current limit | 50–600% | 300% |
| **A03** | Initial voltage | 30–80% | 35% |
| **A04** | Starting time | 1–120 s | 15 s |
| **A05** | Hold voltage | 60–85% | 65% |
| **A06** | Initial ramp time | 1–10 s | 5 s |
| **A07** | Hold time | 1–120 s | 10 s |
| **A08** | Final ramp time | 1–10 s | 3 s |
| **A09** | Soft stop time | 0–60 s | 0 s (coast stop) |

## Operation and monitoring

| Function | Operation |
|---|---|
| **Command source · A00** | Use the keypad, external terminals, RS485 or a combination. The factory setting enables keypad and external control. |
| **External control · A22** | Select pulse or maintained-level control. Factory setting: pulse. See the connection diagrams on page 04. |
| **Operation panel · A23** | Removable Chinese / English LCD. RUN starts the motor; STOP/RESET stops or resets it. SHIFT opens the fault record from the main display. |
| **Live measurements** | Read phase and average currents, input and output voltages, start completion, current unbalance, line frequency and phase sequence. |
| **Operating history** | Read cumulative run time and number of starts. Fault records include supply voltage, phase currents and cumulative run time. |

MOTOR AND STARTER PROTECTION

# Protection and trip functions

The code in the first column is the trip message number shown on the keypad.

## Detection settings and factory responses

| Trip | Function | Detection or adjustment | Factory setting |
|---|---|---|---|
| **01** | Input phase loss | One or more input phases are missing when a start is requested. | C09: trip |
| **02** | Output phase loss | Output phase loss or open motor connection. | C10: trip |
| **03** | Running overload | Inverse-time protection. B00 selects class 1–30. | Class 10; C00: trip |
| **04** | Underload | B11 threshold 10–100%; B12 delay 1–120 s. | 30% / 10 s; C06: ignore |
| **05** | Starter overheat | The starter temperature switch detects overheating. | C07: trip |
| **06** | Overvoltage | B05 threshold 100–140%; B06 delay 0–120 s. | 120% / 5 s; C03: trip |
| **07** | Undervoltage | B07 threshold 50–100%; B08 delay 0–120 s. | 80% / 5 s; C04: trip |
| **08** | Running overcurrent | B03 threshold 50–600%; B04 delay 0–6000 s. | 200% / 5 s; C02: trip |
| **09** | Starting overcurrent | B01 threshold 50–600%; B02 delay 0–120 s. | 500% / 5 s; C01: ignore |
| **10** | External fault | External fault contact opens between terminals 7 and 10. | Contact closed in normal operation |
| **11** | Phase sequence | B13 accepts any, positive or reverse sequence. | Any sequence |
| **12** | Three-phase current unbalance | B09 threshold 20–100%; B10 delay 0–120 s. | 40% / 3 s; C05: trip |
| **13** | SCR short circuit | Thyristor breakdown diagnostic. C08 controls the emergency response. | C08 = 0 (Close) |

## Class 10 overload operating times

| Motor current | 1.5 × rated | 2 × rated | 4 × rated | 6 × rated |
|---|---|---|---|---|
| **Operating time** | 280 s | 117 s | 23.3 s | 10 s |

Starting overcurrent and underload default to Ignore. Review the protection settings during commissioning. Clear the cause of a trip before resetting the starter.

POWER AND CONTROL CONNECTIONS

# Wiring diagrams

Power terminals R/S/T connect to the three-phase supply. Terminals U/V/W connect to the motor.

## Main circuit and control terminals

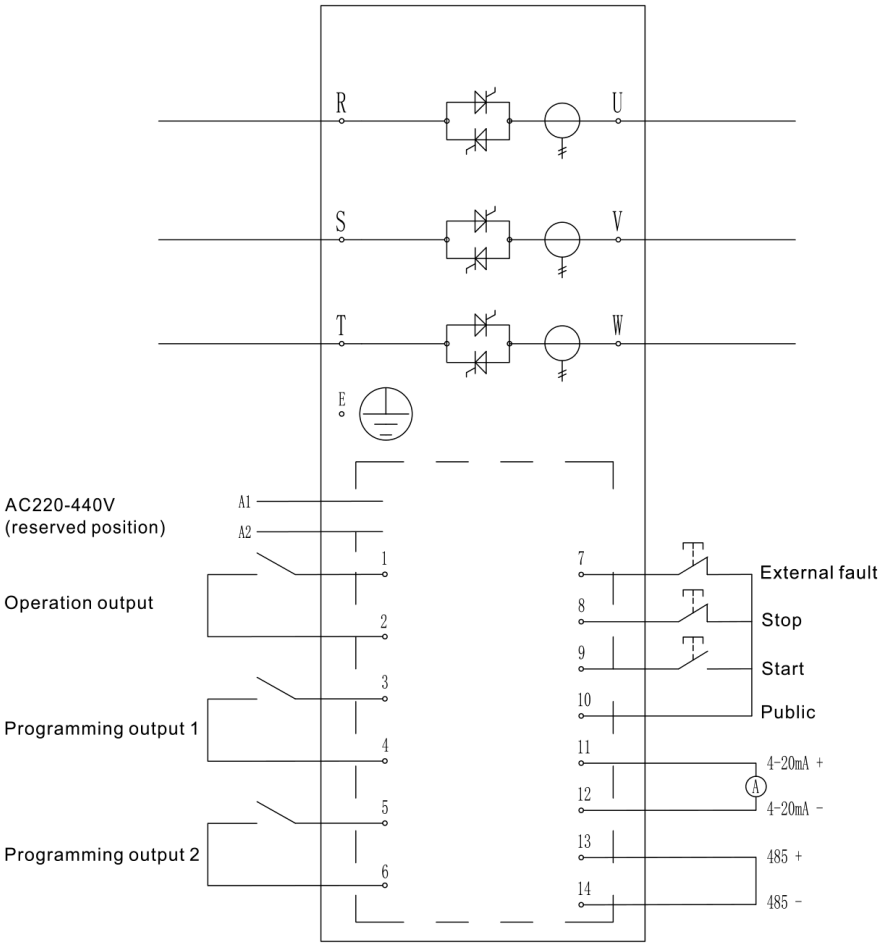


## Remote start and stop

### Two-wire control

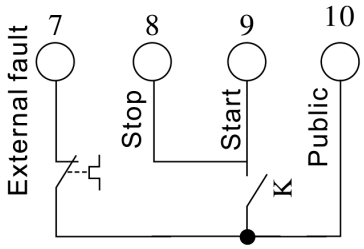


Close K to start; open K to stop.

### Three-wire control

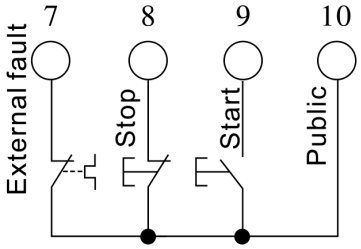


Separate stop and start pushbuttons.

Terminal 10 is the control common. The external fault circuit between terminals 7 and 10 must be closed for normal operation.

CONTROL INTERFACES

# Terminal functions and Modbus RTU

Remote inputs, relay outputs, analog feedback and the RS485 interface.

## Control terminal assignments

| Terminals | Signal | Function or factory setting |
|---|---|---|
| **1 / 2** | Running relay | Voltage-free contact closes after a successful start. |
| **3 / 4** | Programmable relay 1 | A11: operation by default. A12 output delay 0–600 s; default 0 s. |
| **5 / 6** | Programmable relay 2 | A13: fault by default. A14 output delay 0–600 s; default 0 s. |
| **7 / 10** | External fault / common | Closed during normal operation. |
| **8 / 9 / 10** | Stop / start / common | Remote command inputs; use the two-wire or three-wire circuit on page 04. |
| **11 / 12** | Analog output + / − | 4–20 mA signal. A17 sets the upper-limit current from 50–500%; default 200%. |
| **13 / 14** | RS485 + / − | Half-duplex Modbus RTU. |
| **A1 / A2** | Optional external supply | 220–440 V AC. Specify this supply option when ordering. |

## Communication settings and operating data

| Item | Specification |
|---|---|
| **Address and speed** | A19: station 1–127 (default 1). A20: 2400, 4800, 9600 or 19200 bit/s (default 9600). |
| **Serial format** | 8 data bits, no parity, 1 stop bit (8N1). |
| **Supported functions** | 03 reads a register; 06 writes a single register. |
| **Status registers** | 100: ready, starting, running, stopping or fault. 101: current fault. |
| **Measurement registers** | 102: average current; 103–104: input and output voltage; 105–107: phase currents; 111–112: frequency and phase sequence. |

Programmable relay functions include operation, standby, fault and current reached. A15 sets the current-reached threshold from 1–600% (default 100%).

MECHANICAL DATA

# Dimensions and installation

Enclosure dimensions, single-unit packing data and operating conditions.

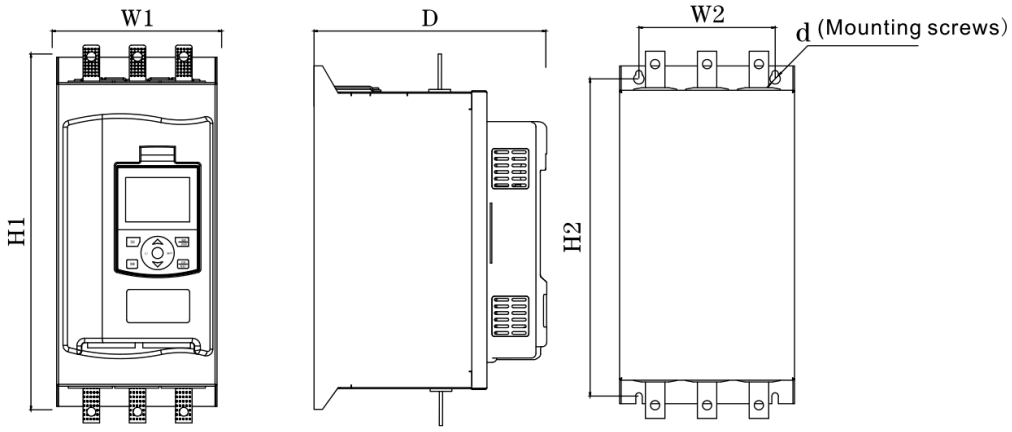


Series outline for orientation. Obtain the model-specific mounting drawing before drilling.

## Enclosure and single-unit packing data

| Item | Measurement basis | Model value |
|---|---|---|
| **Product dimensions** | Height × width × depth | 315 × 145 × 214 mm |
| **Packed dimensions** | Height × width × depth | 395 × 210 × 305 mm |
| **Net weight** | Unpacked unit | 5.3 kg |
| **Gross weight** | One packed unit | 5.75 kg |

## Operating environment

| Item | Installation requirement |
|---|---|
| **Enclosure / cooling** | IP20; forced-air cooling. Keep the ventilation path clear. |
| **Ambient temperature** | −10 °C to +40 °C. |
| **Altitude** | Below 2000 m; derating is required above 2000 m. |
| **Humidity / vibration** | Below 95% RH, non-condensing; vibration below 0.5 g. |
| **Location** | Indoors, well ventilated and free of conductive dust or flammable, explosive or corrosive gases. |